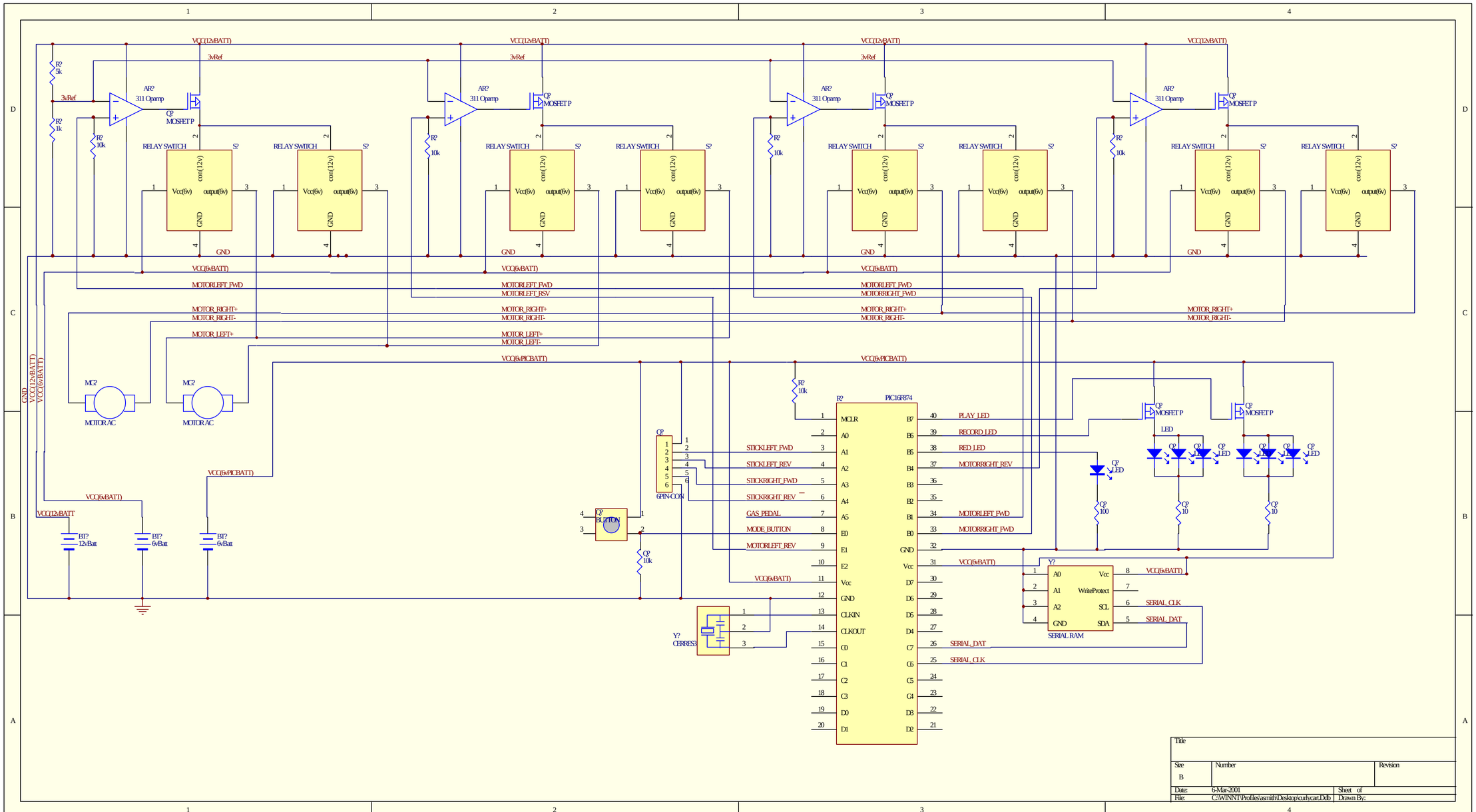
VCC(12vBATT)
3vRef
R? 5k
R? 1k
R? 10k
AR? 311 Opamp
Q? MOSFET P
RELAY SWITCH
S?
con(12v)
Vcc(6v)
output(6v)
GND
VCC(6vBATT)
MOTORLEFT_FWD
MOTORLEFT_RSV
MOTOR_RIGHT+
MOTOR_RIGHT-
MOTOR_LEFT+
MOTOR_LEFT-
MOTORRIGHT_FWD
VCC(6vPICBATT)
M?
MOTOR AC
B?
12vBatt
6vBatt
VCC(12vBATT)
Q? 6PIN-CON
STICKLEFT_FWD
STICKLEFT_REV
STICKRIGHT_FWD
STICKRIGHT_REV
GAS_PEDAL
MODE_BUTTON
MOTORLEFT_REV
Q? BUTTON
Q? 10k
Y? CERRES?
R? PIC16F874
MCLR
A0
A1
A2
A3
A4
A5
E0
E1
E2
Vcc
GND
CLKIN
CLKOUT
C0
C1
C2
C3
D0
D1
B7
B6
B5
B4
B3
B2
B1
B0
D7
D6
D5
D4
C7
C6
C5
C4
D3
D2
PLAY_LED
RECORD_LED
RED_LED
MOTORRIGHT_REV
MOTORLEFT_FWD
MOTORRIGHT_FWD
SERIAL_DAT
SERIAL_CLK
Q? LED
Q? 100
Q? 10
Y?
WriteProtect
SCL
SDA
SERIAL RAM
Title
Size
B
Number
Revision
Date: 6-Mar-2001
Sheet of
File: C:\WINNT\Profiles\asmith\Desktop\curlycart.Dsb
Drawn By: